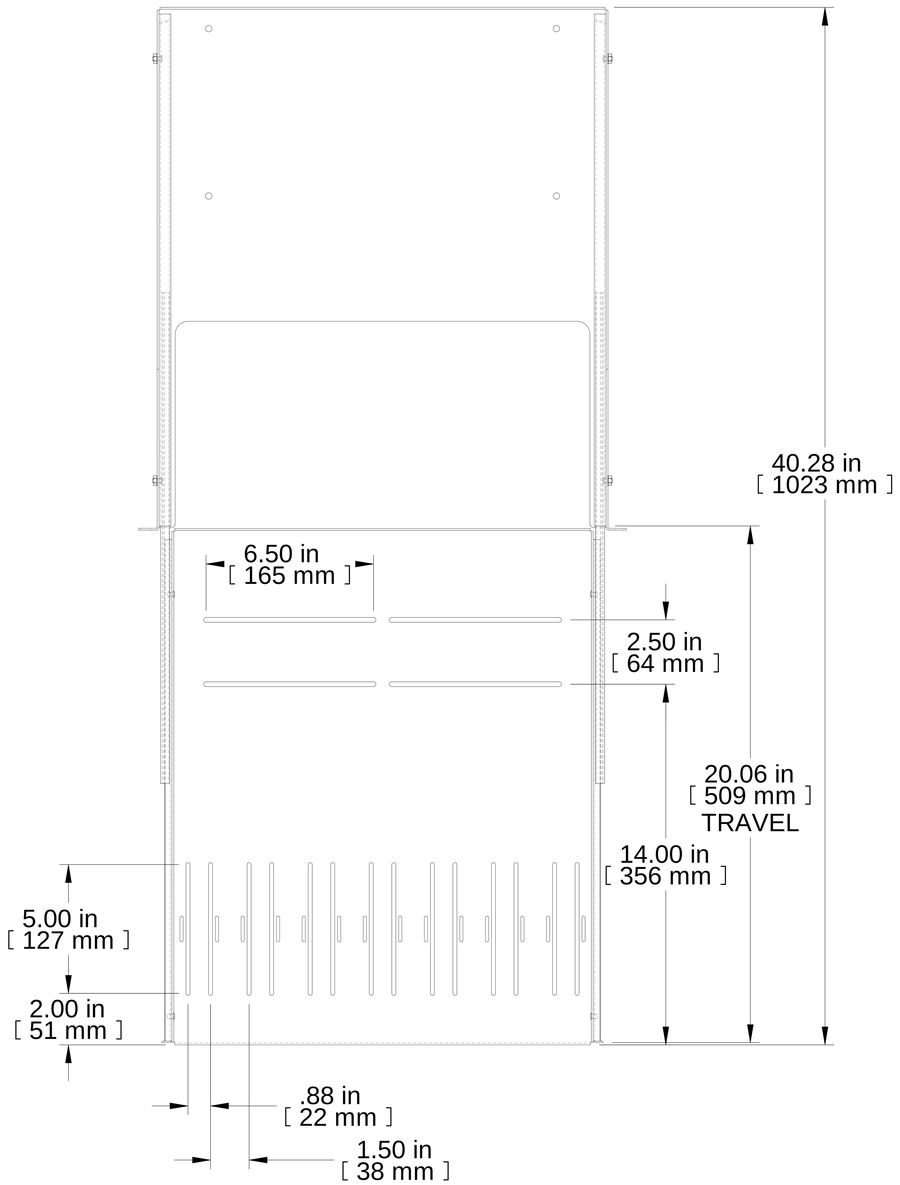

TOP VIEW EXTENDED

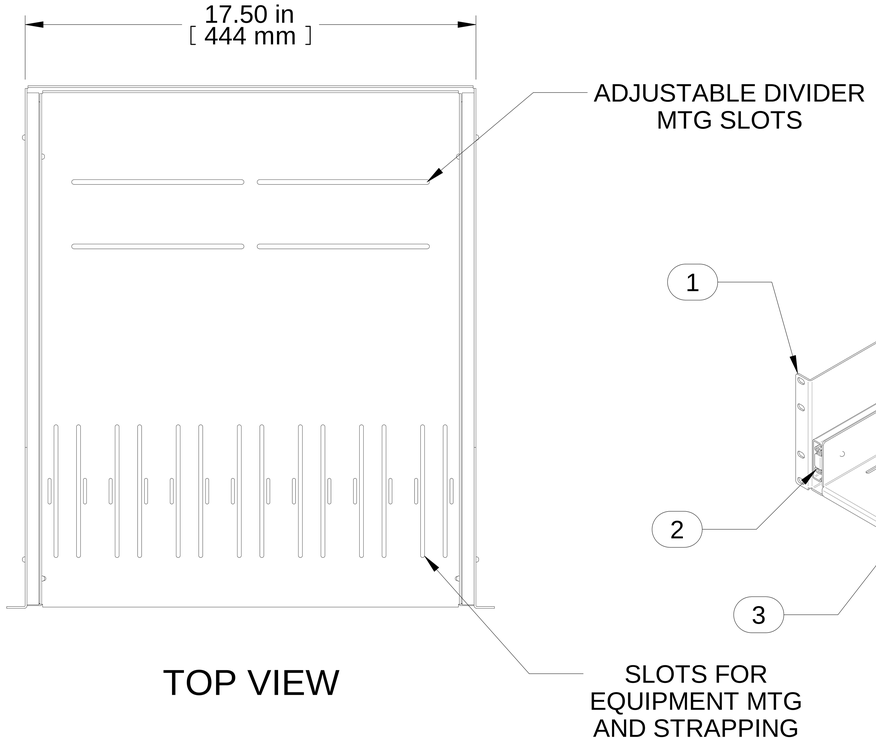

TOP VIEW

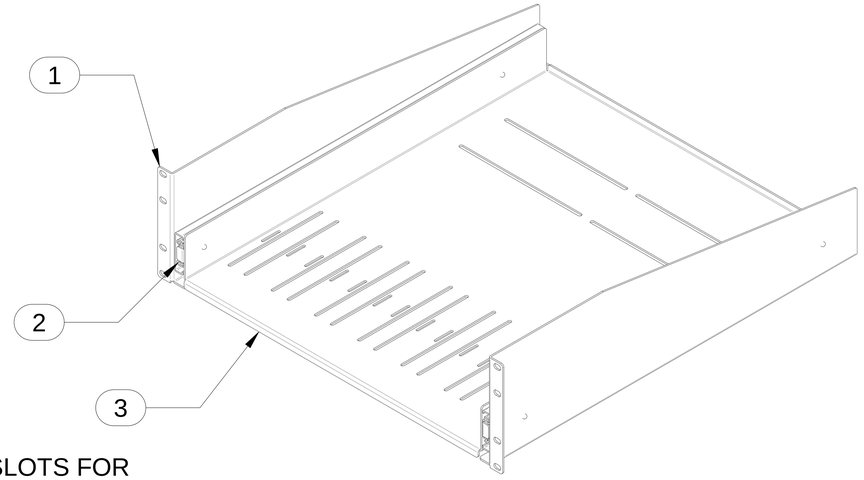

ISOMETRIC

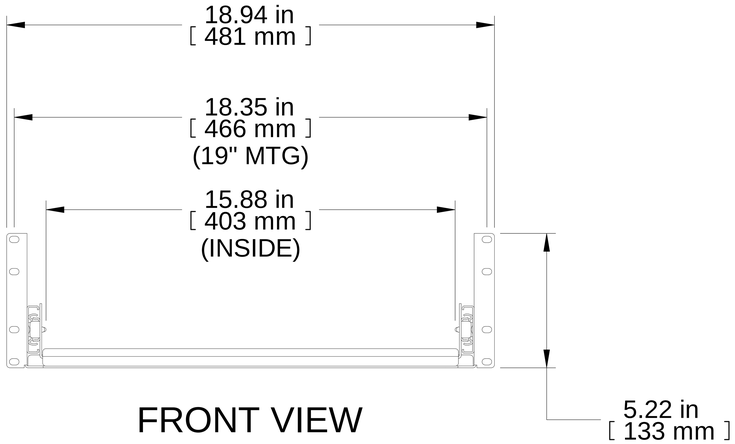

FRONT VIEW

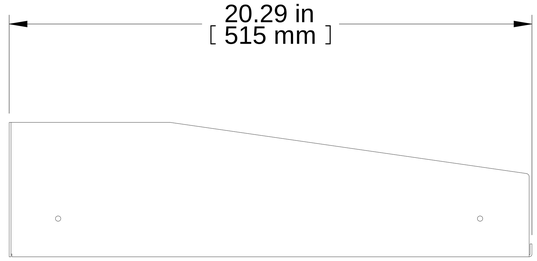

R.S. VIEW

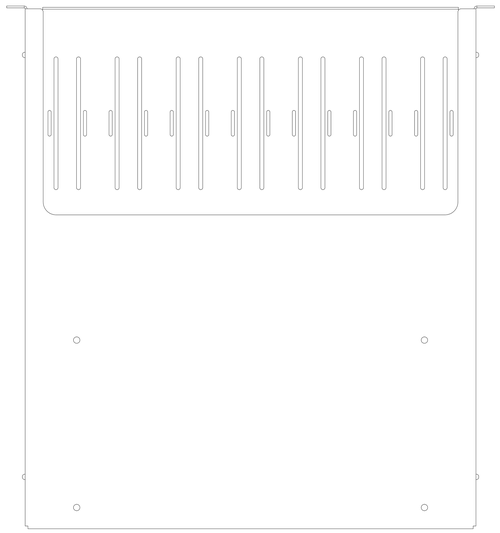

BOTTOM VIEW

Item Number	Title	Quantity
1	RSP - 3U 20D SHELL	1
2	SLIDE - 20" FULL TRAVEL	2
3	RSP - 20D SLIDE SHELF	1

PART NUMBERS

RSP3U20	PAINTED TEXTURED BLACK

NOTES

20" SLIDE DEPTH
MOUNTING HARDWARE NOT INCLUDED
See Hammond Website for More Information

Français

Pour tous les détails sur nos produits,
svp veuillez consulter notre site www.hammondmfg.com

Data subject to change without notice. Isometric drawing not to scale.
Les données sont sujettes à changement sans préavis.

HAMMOND MANUFACTURING®

www.hammondmfg.com

PART NO. **RSP3U20**